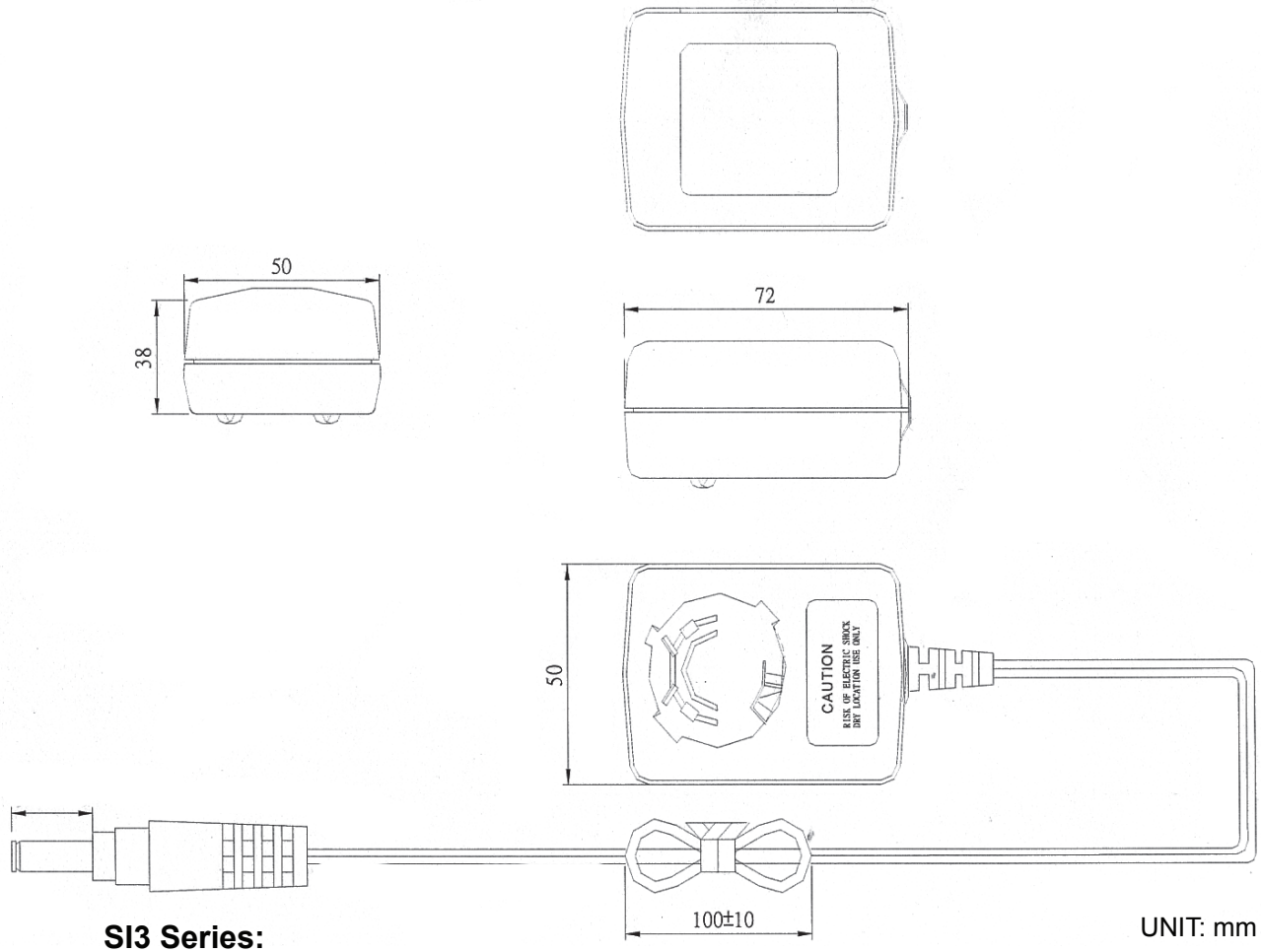

UNIT: mm

Specifications:

SI3 Series:

Input voltage	100-240 VAC (Limits: 90-246VAC)
Input frequency	47 to 63 Hz (Limits: 47-63 Hz)
Output voltage	See tables on page 3
Output current	See tables on page 3
Output power range	24 Watts maximum (see tables below)
Over voltage protection	120% min
Over current protection	120% min
Short Protection	Auto Recovery
Load Regulation	5%
Operating temperature	0° C ~ +40° C
Storage temperature	-20° C ~ +85° C
Relative humidity	5% ~ 95% non-condensing
Efficiency	76% minimum
Insulation resistance	DC500V, 100M Ohm (Min .)
Withstand voltage	3000 VAC / Min. from input to output, 5mA (Max.)
Safety requirements	Meets or Exceeds: T-MARK, UL, CUL, CE
Warranty	1 year

SEE PAGE 2 FOR COUNTRY INPUT PLUGS

SMP TECHNOLGY, INC.

SWITCHING POWER SUPPLY, WALLMOUNT, INTERCHANGEABLE

24 WATT, AVAILABLE INPUT PLUGS: USA, AUSTRALIA, UK, EUROPE

SERIES: SI3

U. S. A. P/N: SIU

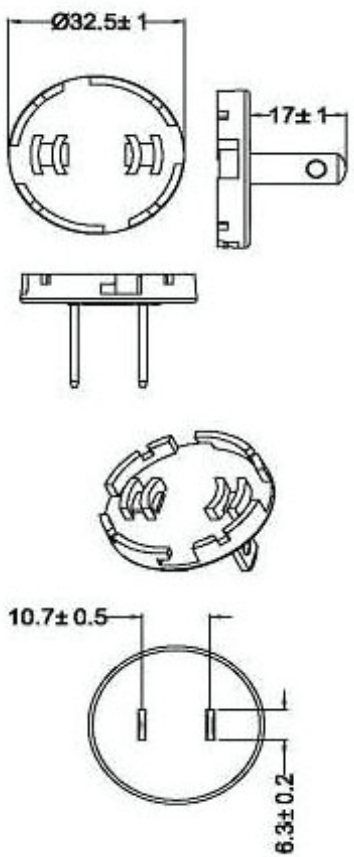

Australia P/N: SIA

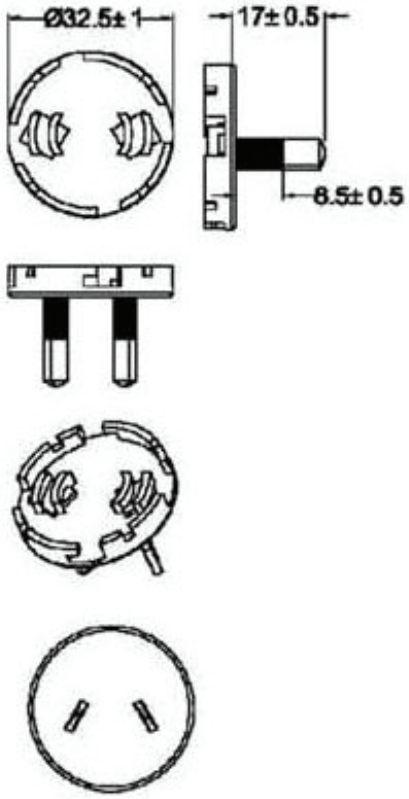

U.K. P/N: SIK

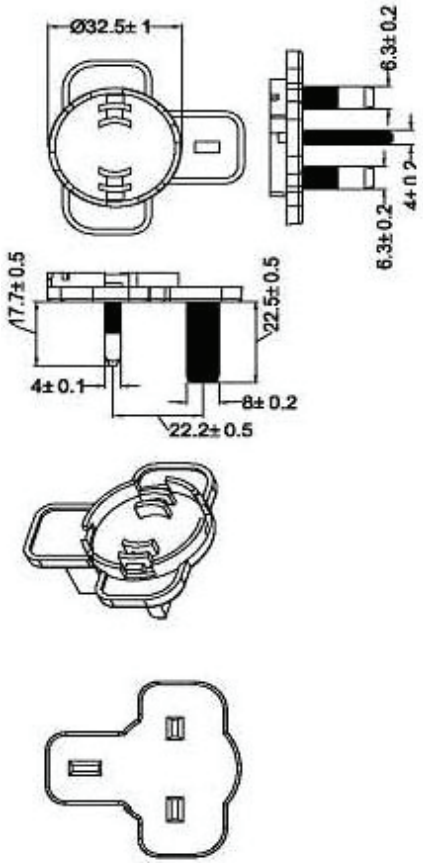

Europe P/N: SIE

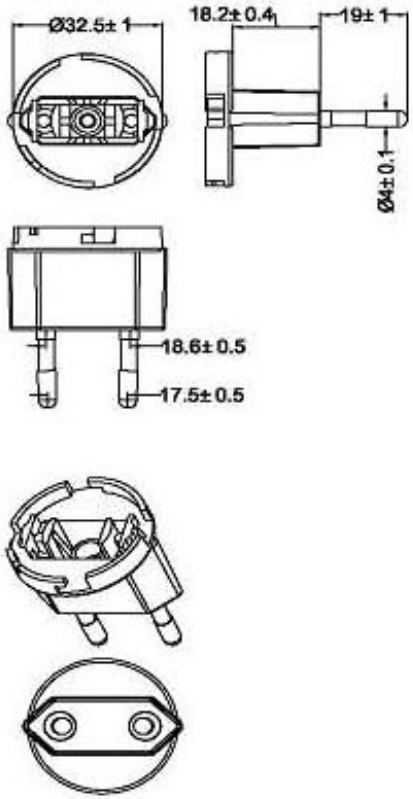

SMP TECHNOLGY, INC.
SWITCHING POWER SUPPLY, WALLMOUNT, INTERCHANGEABLE
24 WATT, AVAILABLE INPUT PLUGS: USA, AUSTRALIA, UK, EUROPE
SERIES: SI3 Pg: 2

MODEL	INPUT	OUTPUT VOLTAGE	POWER OUTPUT
SI3 3.3	AC 90~264V (47~63Hz)	3.3V	24W
SI3 5.0		5V	24W
SI3 6.0		6V	24W
SI3 7.5		7.5V	24W
SI3 9.0		9V	24W
SI3 12.0		12V	24W
SI3 15.0		15V	24W
SI3 24.0		24V	24W
SI3 30.0		30V	24W

FOR OUTPUT PLUG TABLE
SEE PAGE 4

STRAIGHT

MALE PLUG STRAIGHT (parallel cord)

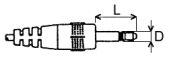

Part Number	D +/-0.1		L+/-0.5	Wire Gauge
SM1A	ø2.5		11	#22 #24
SM2A	ø3.5		14	#22 #24

MALE PLUG STRAIGHT (parallel/ coaxial cord)

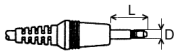

Part Number	D +/-0.1		L+/-0.5	Wire Gauge
SM2B	ø3.5		14	#22 #24

FEMALE PLUG STRAIGHT (parallel cord)

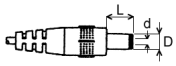

Part Number	D +/-0.1	d+/-0.1	L+/-0.5	Wire Gauge
SF2A	ø3.5	ø1.3	7	#22 #24
SF2B	ø3.5	ø1.3	9.5	#22 #24
SF2C	ø3.5	ø1.3	11	#22 #24
SF2D	ø3.5	ø1.3	14	#22 #24
SF3A	ø5.0	ø2.1	9.5	#20
SF3B	ø5.0	ø2.1	11	#20
SF3C	ø5.0	ø2.1	14	#20
SF5C	ø5.5	ø2.5	9.5	#18,#20
SF5B	ø5.5	ø2.5	11	#18,#20
SF5A	ø5.5	ø2.5	14	#18,#20
SF6A	ø6.5	ø3.0	9.5	#20
SF6B	ø6.5	ø3.0	11	#20

FEMALE PLUG STRAIGHT (parallel cord)

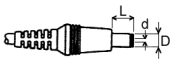

Part Number	D +/-0.1	d+/-0.1	L+/-0.5	Wire Gauge
SF3D	ø5.0	ø2.1	9.5	#22 #24
SF3E	ø5.5	ø2.1	11	#22 #24
SF5D	ø5.5	ø2.1	9.5	#22 #24
SF5E	ø5.5	ø2.5	11	#22 #24

FEMALE PLUG STRAIGHT (parallel cord #20,#22,#24 /Coaxial #22)

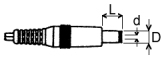

Part Number	D +/-0.1	d+/-0.1	L+/-0.5	Wire Gauge
SF5F	ø5.5	ø2.1	9.5	#20,#22,#23
SF5G	ø5.5	ø2.1	11	#20,#22,#23
SF5H	ø5.5	ø2.5	9.5	#20,#22,#23
SF5I	ø5.5	ø2.5	11	#20,#22,#23

FEMALE PLUG STRAIGHT (SPT-1#18 & XTW-A #20 Cord)

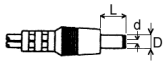

Part Number	D +/-0.1	d+/-0.1	L+/-0.5	Wire Gauge
SF5J	ø5.5	ø2.1	12.5	#18,#20

FEMALE PLUG STRAIGHT (parallel /coaxial cord)

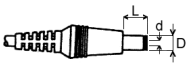

Part Number	D +/-0.1	d+/-0.1	L+/-0.5	Wire Gauge
SF5K	ø5.5	ø2.1	9.5	#22 #24
SF5L	ø5.5	ø2.1	11	#22 #24
SF5M	ø5.5	ø2.1	14	#22 #24
SF5N	ø5.5	ø2.5	11	#22 #24

MINI DIN MALE PLUG, STRAIGHT

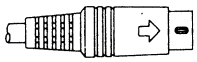

Part Number	Pin Configuration
SMD3	
SMD4	
SMD5	
SMS5	
SMD6	
SMD7	

RIGHT ANGLE

FEMALE PLUG RIGHT ANGLE (parallel cord)

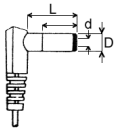

Part Number	D +/-0.1	d+/-0.1	L+/-0.5	Wire Gauge
RF4A	ø5.03	ø1.57	8.2	#22 #24
RF4B	ø5.03	ø1.57	13.5	#22 #24
RF3A	ø5.0	ø2.1	9	#22 #24
RF3B	ø5.0	ø2.1	11	#22 #24
RF3C	ø5.0	ø2.5	11	#22 #24
RF5A	ø5.5	ø1.3	11	#22 #24
RF5B	ø5.5	ø2.1	9.5	#22 #24
RF5C	ø5.5	ø2.5	9.5	#22 #24
RF5D	ø5.5	ø2.1	11	#22 #24
RF5E	ø5.5	ø2.5	11	#22 #24

FEMALE PLUG RIGHT ANGLE (parallel cord)

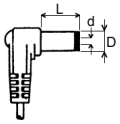

Part Number	D +/-0.1	d+/-0.1	L+/-0.5	Wire Gauge
RF2A	ø3.5	ø1.3	9	#22 #24
RF2B	ø3.5	ø1.3	11	#22 #24
RF5F	ø5.5	ø2.1	9.5	#22 #24
RF5G	ø5.5	ø2.1	11	#22 #24
RF5H	ø5.5	ø2.5	9.5	#22 #24
RF5I	ø5.5	ø2.5	11	#22 #24

FEMALE PLUG RIGHT ANGLE (Coaxial cord)

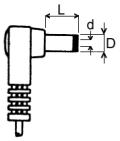

Part Number	D +/-0.1	d+/-0.1	L+/-0.5	Wire Gauge
RF5J	ø5.5	ø2.1	9.5	#22 #24
RF5K	ø5.5	ø2.1	11	#22 #24
RF5L	ø5.5	ø2.5	9.5	#22 #24
RF5M	ø5.5	ø2.5	11	#22 #24

MALE/FEMALE PLUG RIGHT ANGLE (Parallel cord)

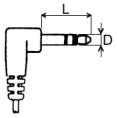

Part Number	D +/-0.1		L+/-0.5	Wire Gauge
RM2A	ø3.5		16.5	#22 #24

MINI DIN MALE PLUG, RIGHT ANGLE

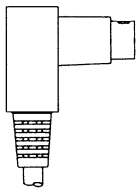

Part Number	Pin Configuration
RMD3	
RMD4	
RMD5	
RMS5	
RMD6	
RMD7	