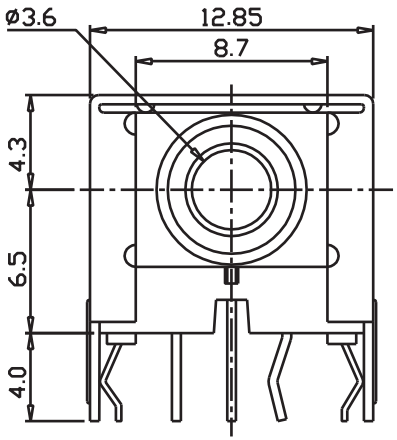

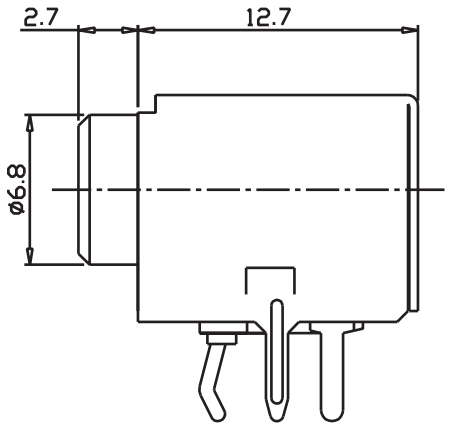

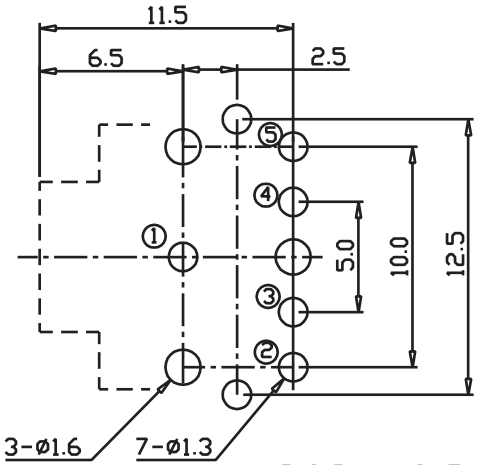

P.C.B LAYOUT
(BOTTOM VIEW)

SCHEMATIC		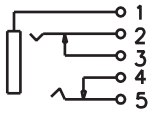	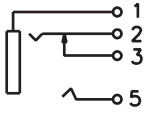	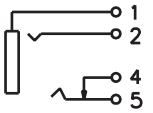	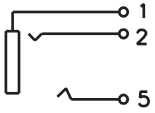	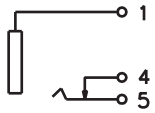	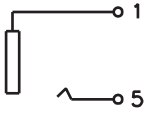
Bushing	Black	S801 - 0111 - 120	S801 - 0121 - 120	S801 - 0131 - 120	S801 - 0141 - 120	S801 - 0151 - 120	S801 - 0161 - 120
	Pink #701C	S801 - 0111 - 123	S801 - 0121 - 123	S801 - 0131 - 123	S801 - 0141 - 123	S801 - 0151 - 123	S801 - 0161 - 123
	Light Blue #284C	S801 - 0111 - 121	S801 - 0121 - 121	S801 - 0131 - 121	S801 - 0141 - 121	S801 - 0151 - 121	S801 - 0161 - 121
	Lime Green #577C	S801 - 0111 - 122	S801 - 0121 - 122	S801 - 0131 - 122	S801 - 0141 - 122	S801 - 0151 - 122	S801 - 0161 - 122

Note: Body Color is Black; Bushing Color can be black or Pantone Color

ELECTRICAL:
VOLTAGE: 16 VDC
CURRENT: 0.3A
CONTACT RESISTANCE: 100 milliohm (Max.)
INSULATOR RESISTANCE: > 100 Mega ohms
DIELECTRIC WITHSTANDING VOLTAGE: 500VAC FOR 1 Min.
OPERATING TEMPERATURE: -25°C TO +85°C

MATERIAL:
INSULATOR: PBT ;UL94V-0
CONTACT: Copper Alloy; Au Plated
SHIELD: Brass; Tin Plated

HOW TO ORDER:

S 8 0 1 - 0 1 X 1 - 1 2 X - Z

TYPE NUMBER
01

SCHEMATIC NUMBER:
See Schematic Number Above

LEAD TYPE:
1 - Kinked Tail

STACK:
1 - Single

BUSHING TYPE:
2 - Non Threaded

COLOR OPTIONS (Body/Cover)
See Schematic

RoHS COMPLIANT

Rev		Drawn	Checked	Approved	Date
0	Issued	D.H.	S.M.	S.M.	03/26/04
A	Revised for RoHS Compliance	B.S.	S.M.	S.M.	07/23/08

SMP TECHNOLOGY, INC.

Stereo Jack, 3.5mm, Shielded, Kinked Tab, 11.0mm, Pantone / Black Color

TOL. DEC. .X +/- 0.5 .XX +/- 0.3 .XXX +/- 0.15 ANGLE +/- 3° UNIT: mm

SERIES: S801-01X1-12X-Z