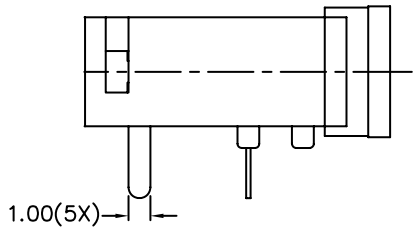

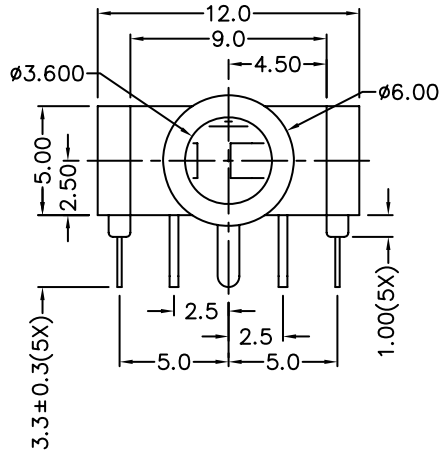

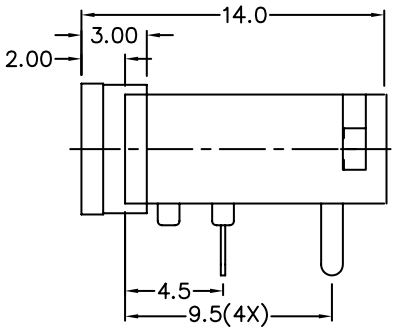

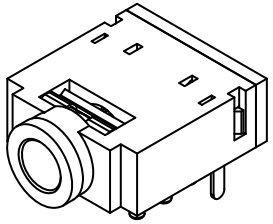

ISOMETRIC VIEW

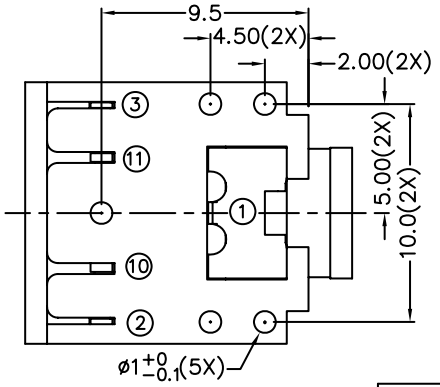

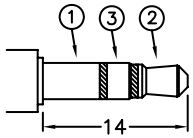

RECOMMNEDED 3.5ø MATING PLUG

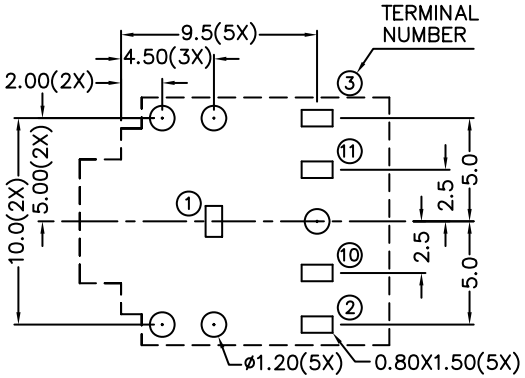

RECOMMENDED PCB LAYOUT

PART NUMBER	S800-0310-140x-z	S800-0320-140x-z	S800-0330-140x-z	S800-0340-140x-z	S800-0350-140x-z
SCHEMATIC	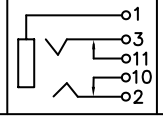	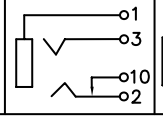	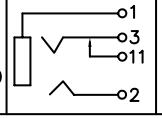	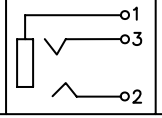	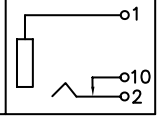

ELECTRICAL:

CURRENT: 0.5A
CONTACT RESISTANCE: < 30 milliohms @ AC 100mA; Max. 1Khz
INSULATOR RESISTANCE: > 100Mohms@500 VDC
DIELECTRIC WITHSTANDING VOLTAGE: 500VAC FOR 1 MIN
INSERTION FORCE: 0.3-3.0 Kg
EXTRACTION FORCE: 0.3-3.0 Kg
DURABILITY: 1500 Cycles MIn.

MATERIAL:

INSULATOR NORMAL: PBT GLASS FILLED; UL94V-0
BUSHING: PBT GLASS FILLED w/ BRASS - NICKEL PLATED INNER RING
CONTACT SPRINGS: PHOSPHOR BRONZE
SHUNT TERMINALS: TIN PLATED BRASS
GROUND TERMINALS: TIN PLATED BRASS

HOW TO ORDER:

S 8 0 0 - 0 3 X 0 - 1 4 0 X - Z

TYPE NUMBER
03

SCHEMATIC NUMBER:
SEE SCHEMATIC NUMBER ABOVE

BODY COLOR OPTION:
0 - BLACK

PACKAGING
0 - TRAY
2 - BAG
3 - TUBE

RoHS COMPLIANT

Rev		Drawn	Checked	Approved	Date
0	Issued	S.E.	S.M.	S.M.	6/9/98
A	Revised for RoHS Compliance	B.S.	S.M.	S.M.	07/23/08

SMP TECHNOLOGY, INC.

3.5 mm Stereo Jack;14 mm (L) x 12 mm (W) x 5 mm (H); Black

Body w/ All Plastic Bushing with Inner Metal Ring

TOL. DEC. .X +/- 0.35 .XX +/- 0.25 .XXX +/- ANGLE +/- UNIT: mm

P/N S800-03X0-140X-Z