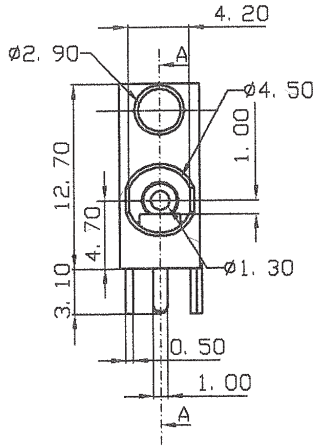

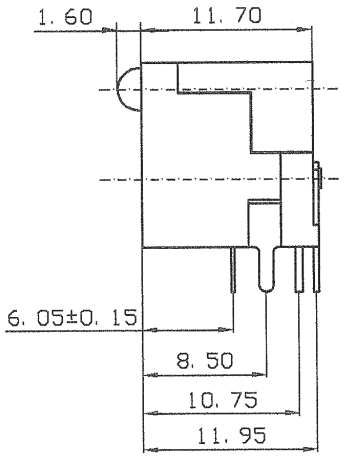

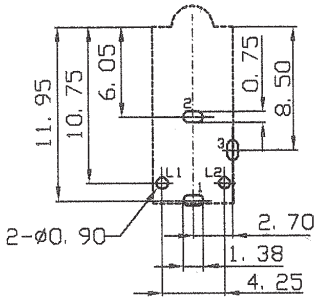

Recommended PCB Layout
(BOTTOM VIEW)

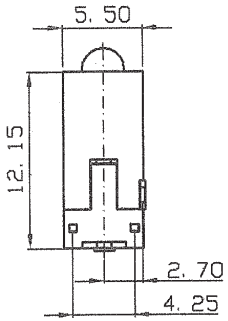

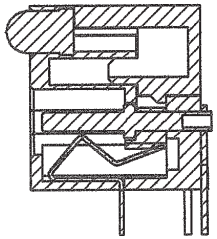

SEC A-A

MECHANICAL:
DURABILITY: 500 Cycles (Insertion & Withdrawl)

ELECTRICAL:
CONTACT RESISTANCE:
BEFORE DURABILITY TEST
BETWEEN TERMINALS:30 MILLIOHMS Max.
PLUG TO CONTACTS: 50 MILLIOHMS Max.
AFTER DURABILITY TEST
BETWEEN TERMINALS: 60 MILLIOHMS Max.
PLUG TO CONTACTS: 100 MILLIOHMS Max.
RATED VOLTAGE: 24V DC.
RATED CURRENT: 2.5 amps.
INSULATOR RESISTANCE: > 100 Megohms Min. At 500 VDC.
OPERATING TEMPERATURE: -25°C TO +85°C

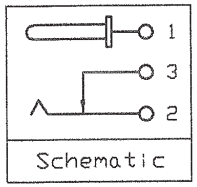

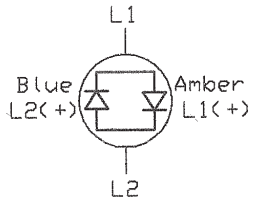

MATERIAL:
INSULATOR: PBT (UL94V-0)
SIGNAL CONTACT: COPPER ALLOY, TIN PLATED
GROUND CONTACT: COPPER ALLOY, TIN PLATED
TERMINAL: COPPER ALLOY, TIN PLATED

HOW TO ORDER:

P	0	0	2	-	3	7	A	0	-	1	X	0	-	Z

CENTER PIN DIAMETER:
3 - 1.3mm

PCB MOUNTING OPTIONS:
1 - SOLDER TAIL (Tapered Pin)

PACKAGING:
0 - TRAY
1 - TAPE / REEL
2 - TUBE

RoHS COMPLIANT

Rev		Drawn	Checked	Approved	Date
0	Issued	B.S.	S.M.	S.M.	04/28/11

SMP TECHNOLOGY, INC.

DC Power Connector with Blue / Amber LED, 1.3mm Ø Pin

TOL. DEC. .X +/- 0.25 .XX +/- 0.15 .XXX +/- 0.08 ANGLE +/- 1° UNIT: mm

P/N: P002-37A0-1X0-Z