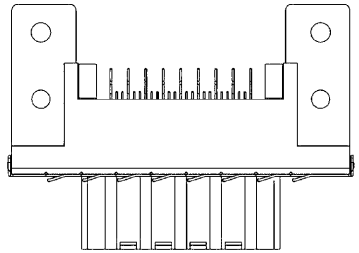

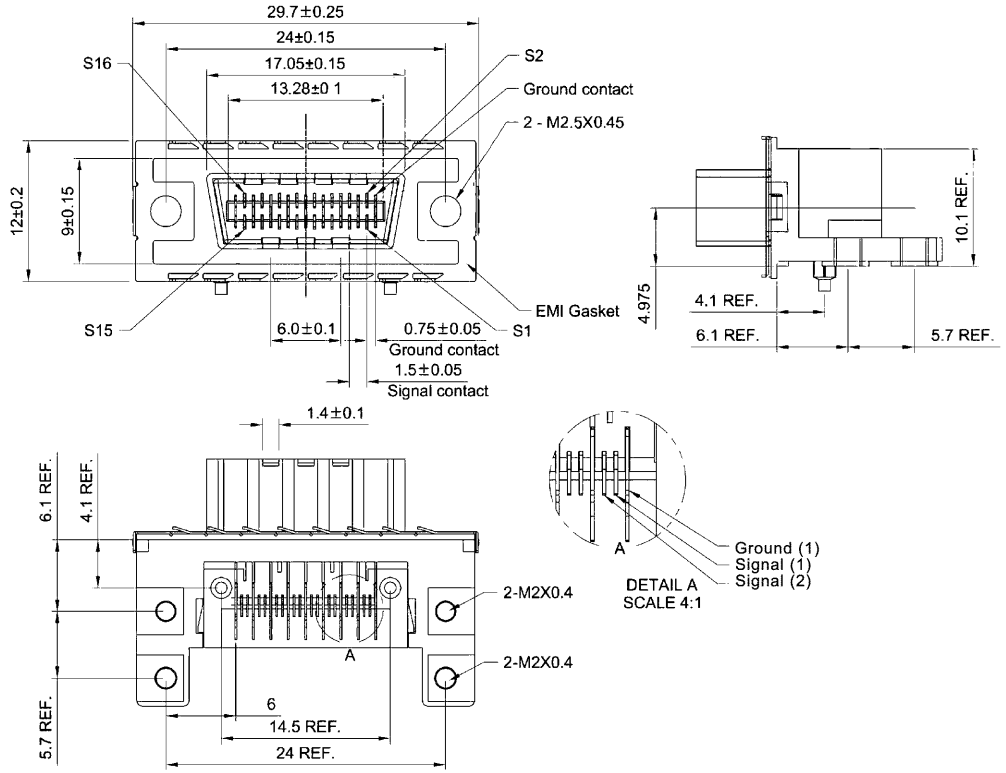

ELECTRICAL:
CONTACT CURRENT RATING: 0.5 AMP (signal)
□ □ □ 1 AMP (ground)
DIELECTRIC WITHSTANDING VOLTAGE: 30 VAC.
INSULATION RESISTANCE: 1000 MEGOHMS Min.
CONTACT RESISTANCE: 80 MEGOHMS Max. (signal)
□ □ 35 MEGOHMS Max. (ground)

MATERIALS:
CONTACTS: Copper Alloy
INSULATOR: Thermoplastic (UL94v-0) (Black)
BRACKET: Zinc Alloy

FINISHES:
CONTACT: 30 u" MIn. Gold on Mating End;
□ 120 u" Min. Tin-Lead on Termination End;
□ All Underplated 50 u" Min. Nickel

ENVIRONMENT:
OPERATING TEMPERATURE: -40°C to + 85°C
DURABILITY: 250 Mating Cycles Max.
HUMIDITY: 80%RH Max.

HOW TO ORDER:

I 0 0 0 - 1 0 0 0 - 1 X 9 - Z

 # OF PINS
1 - 4 Channel (4X)

CABLE ATTACHMENT OPTIONS
1 - M 2.5 x 0.45 Riveted Threaded Inserts w/ Jackscrews (Bulk Packaging)

PCB MOUNTING OPTIONS
0 - (2) x M2 Threaded Holes
1 - (4) x M2 Threaded Holes

SELECTIVE PLATING:
9 - 30u" Au CONTACT AREA/TIN TAIL

RoHS COMPLIANT

Rev		Drawn	Checked	Approved	Date
0	Issued	D.H.	S.M.	S.M.	8/02/04
A	Revised for RoHS Compliance	B.S.	S.M.	S.M.	1/5/07

SCALE:n/a

TOL. DEC. .X +/- 0.25 .XX +/- 0.15 .XXX +/- 0.05 ANGLE +/- 2° UNIT: mm

SMP TECHNOLOGY, INC.

Infiniband Connector, 4X Surface Mount
with M2.5 Cable Attachment

SERIES: I000-1000-1X9-Z