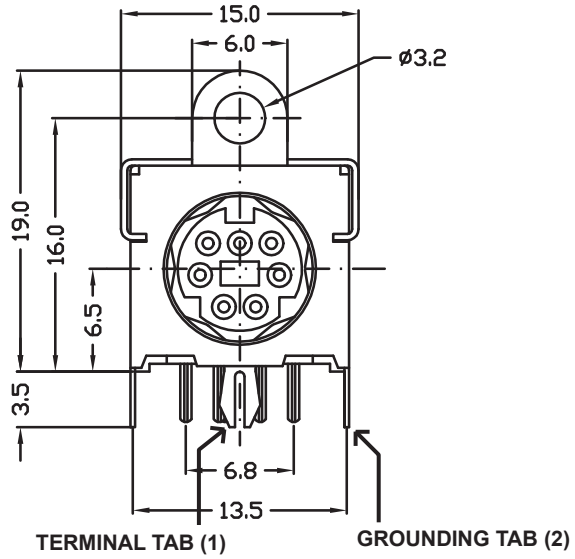


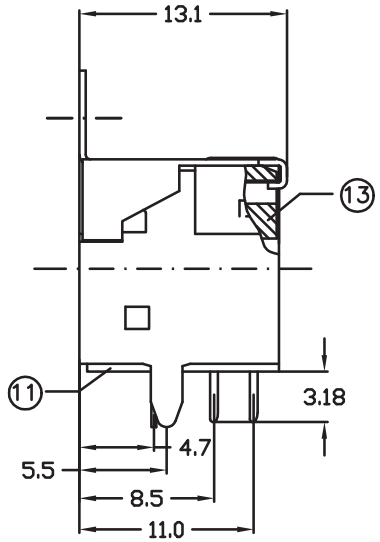


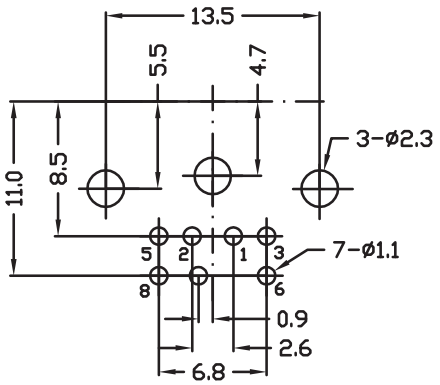


P.C.B LAYOUT
(BOTTOM VIEW)

| | |
|---|---|
| SCHEMATIC | 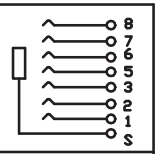 |
| ARRANGEMENT OF CONTACTS | 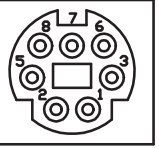 |

**ELECTRICAL:**
CURRENT: 100VAC 1A MAX. / 12VDC 2A MAX.
CONTACT RESISTANCE: 30mΩ Max.
INSULATOR RESISTANCE: 50MΩ Min. AT 250VDC

**MATERIAL:**
INSULATOR: THERMOPLASTIC PBT (UL94V-0)
CONTACT: PHOSPHOR BRONZE
SHIELD: COPPER ALLOY

**MECHANICAL:**
INSERTION FORCE: 4.5Kg Max.
WITHDRAWAL FORCE: 0.9~3Kg

**HOW TO ORDER:**

D 0 0 7 - 0 7 A 1 - 2 0 X - Z

**NUMBER OF CONTACTS:**
07 CONTACTS

**SHIELDING:**
A - FULLY SHIELDED
w/PANEL MOUNT ATTACHMENT

**GROUNDING TABS:**
1 - STRAIGHT TYPE

**TERMINAL TYPE:**
2 - SNAP IN FIT

**SELECTIVE PLATING:**
0 - Au FLASH CONTACT AREA/TIN TAIL
1 - 15u" Au CONTACT AREA/TIN TAIL
2 - 30u" Au CONTACT AREA/TIN TAIL

RoHS COMPLIANT

| Rev | | Drawn | Checked | Approved | Date |
|---|---|---|---|---|---|
| 0 | Issued | D.H. | S.M. | S.M. | 03/03/04 |
| A | Revised for RoHS Compliance | B.S. | S.M. | S.M. | 07/30/08 |

***SMP TECHNOLOGY, INC.***

Mini Din Connector, 7 Position, Fully Shielded w/Panel Mount Attachment (3.2mmØ hole), Straight Grounding Tabs, Snap Fit Terminal Tab

TOL. DEC. X. +/- 0.5 X.X +/- 0.3 X.XX +/- 0.15 ANGLE +/- 3° UNIT: mm

P/N: D007-07A1-20X-Z